FLATCABLE CONNECTORS

D-SUB IDC – stamped contacts – 9 to 37 positions

RoHS compliant – CSA listed, File No.: LR 115000-1 – UL listed, File No.: E202784

DESCRIPTION

- For wire size AWG 26 to 28 flatcable
- Mounting style: with through-hole, Ø 3 mm
- Connector includes strain relief
- Quality class 3 (other quality classes on request)
- Shell: steel tin plated

PRODUCT DRAWING

Socket connector

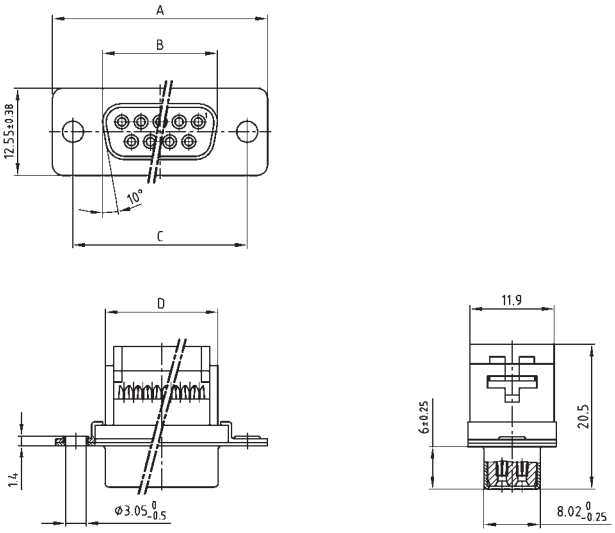

Plug connector

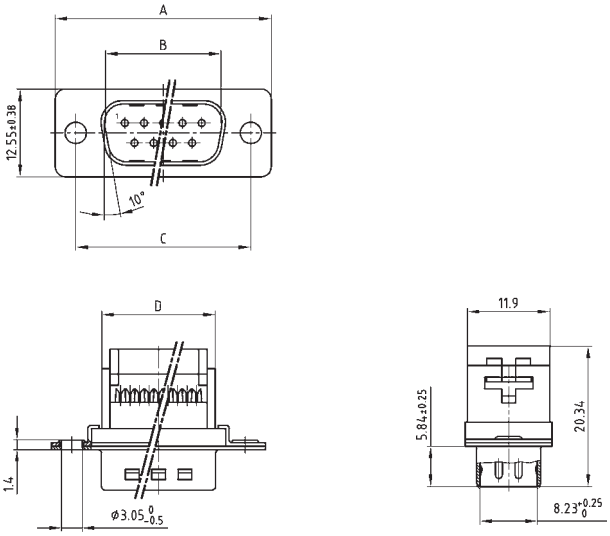

Strain relief

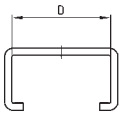

No. of Pos.	A ± 0.25	B ± 0.25	C ± 0.25	D ± 0.25
09	30.80	16.46	25.00	16.10
15	39.10	24.79	33.30	24.00
25	53.09	38.50	47.04	38.14
37	69.40	54.96	63.50	54.60

Strain relief

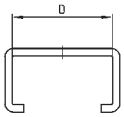

No. of Pos.	A ± 0.25	B ± 0.25	C ± 0.25	D ± 0.25
09	30.80	16.79	25.00	16.10
15	39.10	25.12	33.30	24.00
25	53.09	83.84	47.04	38.14
37	69.40	55.30	63.50	54.60

(Dim. = mm)

ORDER DATA

SOCKET CONNECTOR		
Number of positions	Mounting style	Part number
09	Through-hole	302 A 10089 X
15	Through-hole	302 A 10099 X
25	Through-hole	302 A 10109 X
37	Through-hole	302 A 10119 X

PLUG CONNECTOR		
Number of positions	Mounting style	Part number
09	Through-hole	301 A 10089 X
15	Through-hole	301 A 10099 X
25	Through-hole	301 A 10109 X
37	Through-hole	301 A 10119 X